Nominal Dimensions, Mass and Sectional Properties of Hot Rolled Beam Sections (Medium Flange)

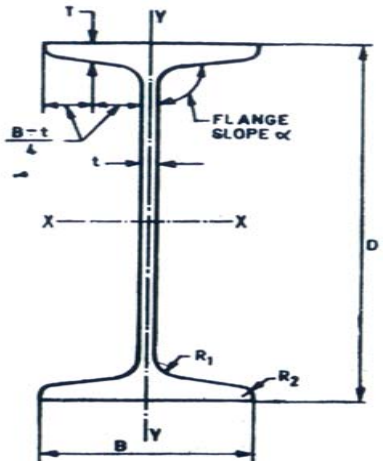

Designation	Mass M Kg/m	Sectional area,a cm^2	Dimensions D mm	B mm	t mm	T mm	Flange Slope α deg	R_1 mm	R_2 mm	Sectional Properties I_x cm^4	I_y cm^4	r_x cm	r_y cm	Z_x cm^3	Z_y cm^3
MB 125	13.3	17.00	125	70	5.0	8.0	98.0	9.0	4.5	445.0	38.5	5.16	1.51	71.2	11.0
MB 150	15.0	19.10	150	75	5.0	8.0	98.0	9.0	4.5	718.0	46.8	6.13	1.57	95.7	12.5
MB 175	19.6	25.00	175	85	5.8	9.0	98.0	10.0	5.0	1260.0	76.7	7.13	1.76	144.0	18.0