Nominal Dimensions, Mass and Sectional Properties of Hot Rolled Beam Sections (Medium Flange)

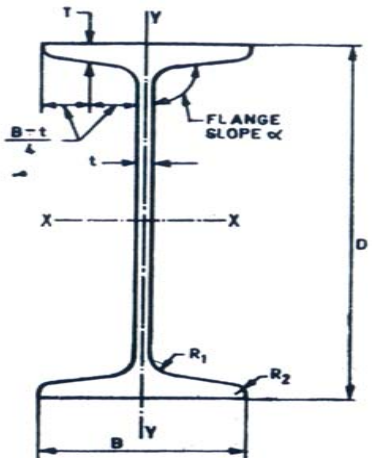

Designation	Mass M Kg/m	Sectional area,a cm^2	Dimensions							Sectional Properties					
			D mm	B mm	t mm	T mm	Flange Slope α deg	R_1 mm	R_2 mm	I_x cm^4	I_y cm^4	r_x cm	r_y cm	Z_x cm^3	Z_y cm^3
MB 250	37.3	47.50	250	125	6.9	12.5	98.0	13.0	6.5	5130.0	335	10.4	2.65	410	53.5
MB 300	46.0	58.60	300	140	7.7	13.1	98.0	14.0	7.0	8990.0	486	12.4	2.86	599	69.5